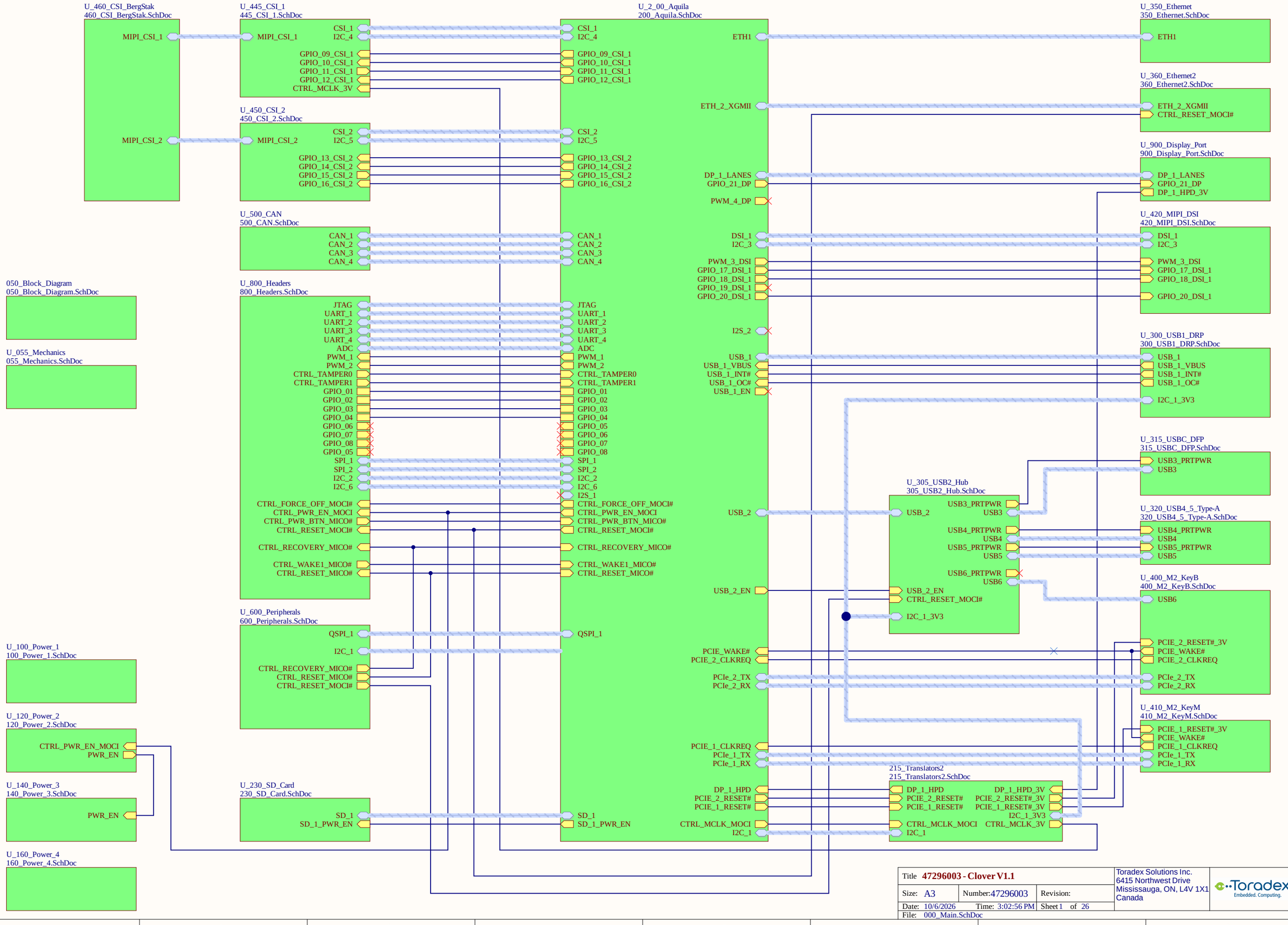

Title	47296003 - Clover V1.1		Toradex Solutions Inc. 6415 Northwest Drive Mississauga, ON, L4V 1X1 Canada
Size: A3	Number: 47296003	Revision:	
Date: 10/6/2026	Time: 3:02:56 PM	Sheet 1 of 26	
File: 000_Main.SchDoc			

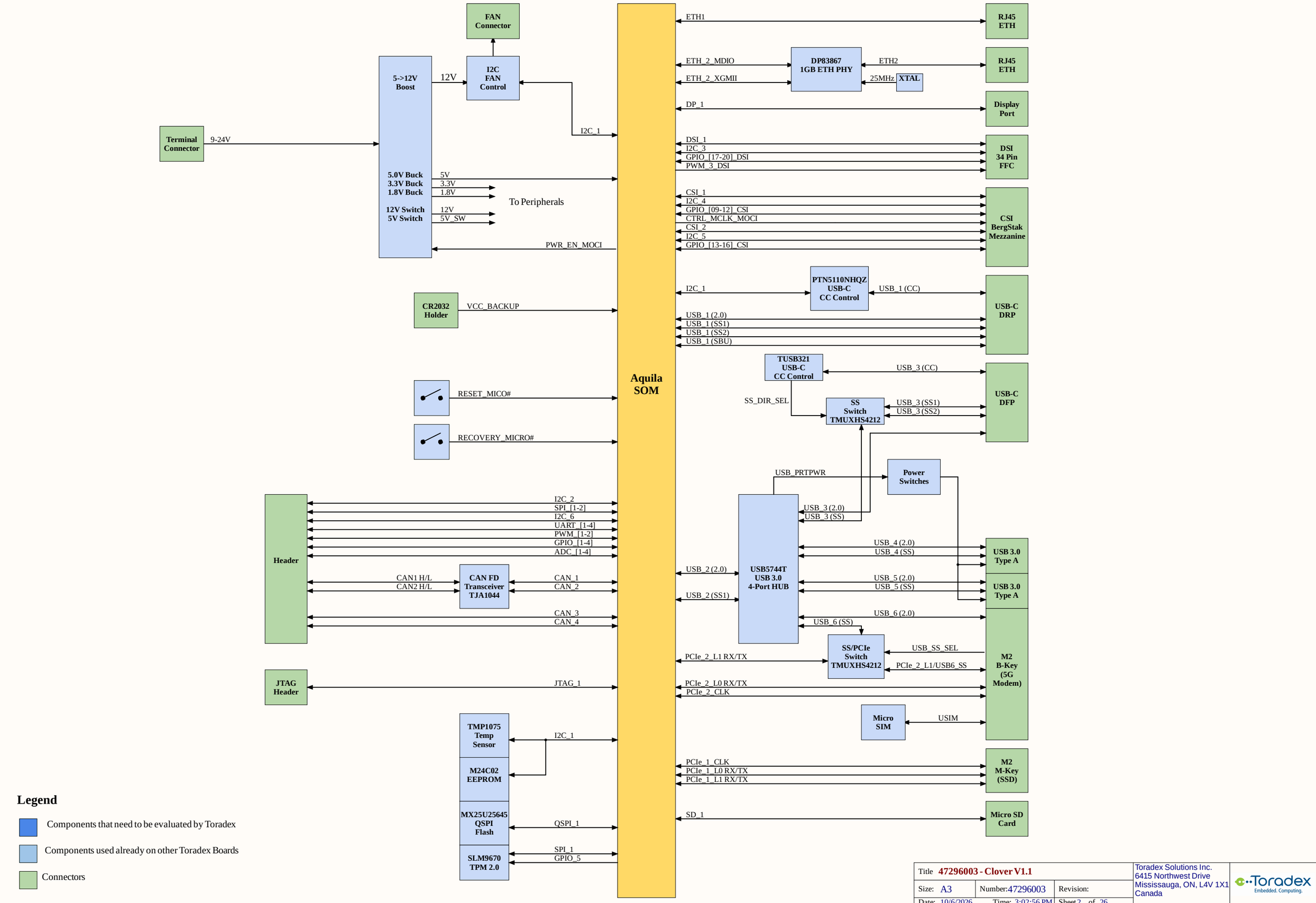

Title	47296003 - Clover V1.1		Toradex Solutions Inc. 6415 Northwest Drive Mississauga, ON, L4V 1X1 Canada
Size: A3	Number: 47296003	Revision:	
Date: 10/6/2026	Time: 3:02:56 PM	Sheet 2 of 26	
File: 050_Block_Diagram.SchDoc			

Fiducials Top Layer

FID1 FID4 FID6

FID FID FID

Fiducial round Fiducial round Fiducial round

Fiducials Bottom Layer

FID2 FID3 FID5

FID FID FID

Fiducial round Fiducial round Fiducial round

Mounting Holes

H1 H2 H3 H4

SHLD1 SHLD2 SHLD3 SHLD4

Toradex Logo

MECH1

Title **47296003 - Clover V1.1**			Toradex Solutions Inc. 6415 Northwest Drive Mississauga, ON, L4V 1X1 Canada
Size: Letter	Number: 47296003	Revision:	
Date: 10/6/2026 Time: 3:02:56 PM		Sheet 3 of 26	
File: 055_Mechanics.SchDoc			

Power Supplies

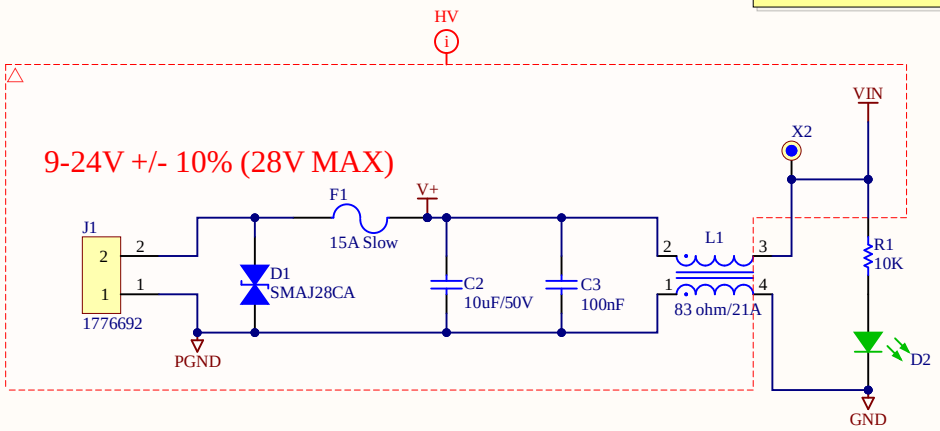

Standby 5V source Always on

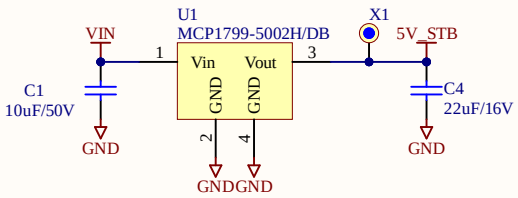

GND test Points

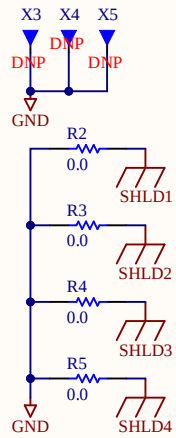

Mounting holes are connected to SHLD

Title	47296003 - Clover V1.1		Toradex Solutions Inc. 6415 Northwest Drive Mississauga, ON, L4V 1X1 Canada
Size: Letter	Number: 47296003	Revision:	
Date: 10/6/2026	Time: 3:02:56 PM	Sheet 4 of 26	
File: 100_Power_1.SchDoc			

Buck converter 3V3/6A

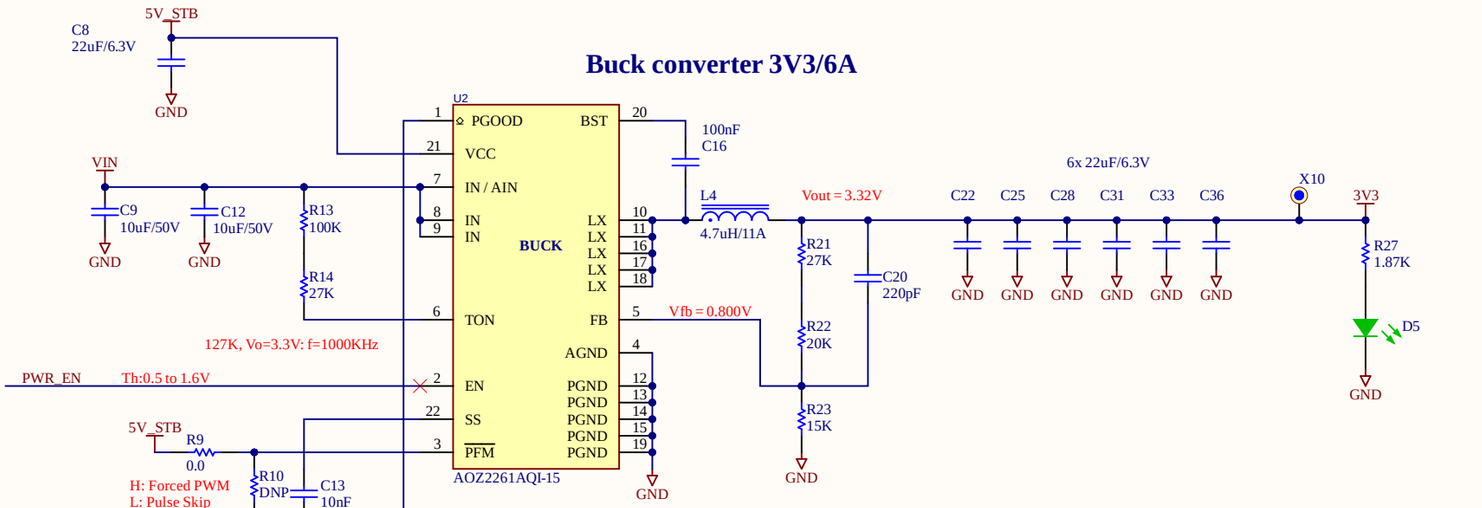

Buck converter 1V8/2A

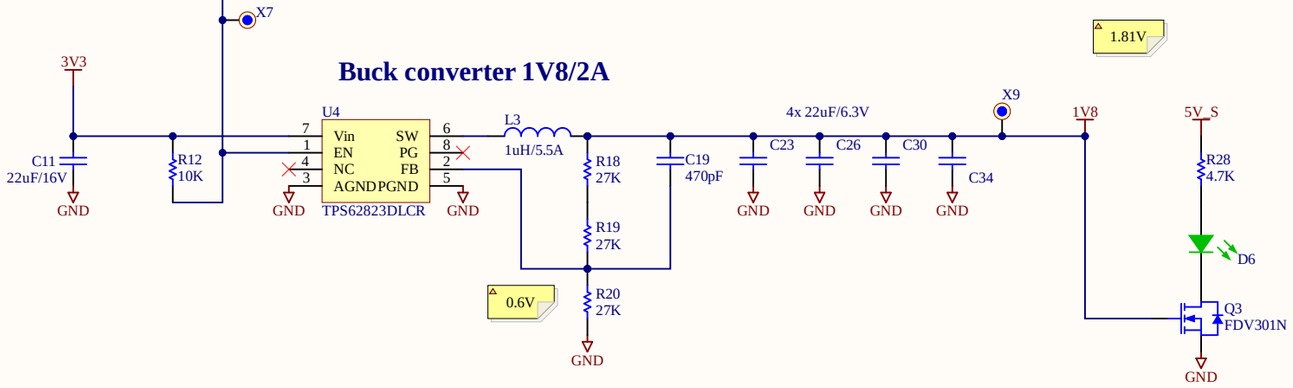

Boost converter (12V/0.5A)

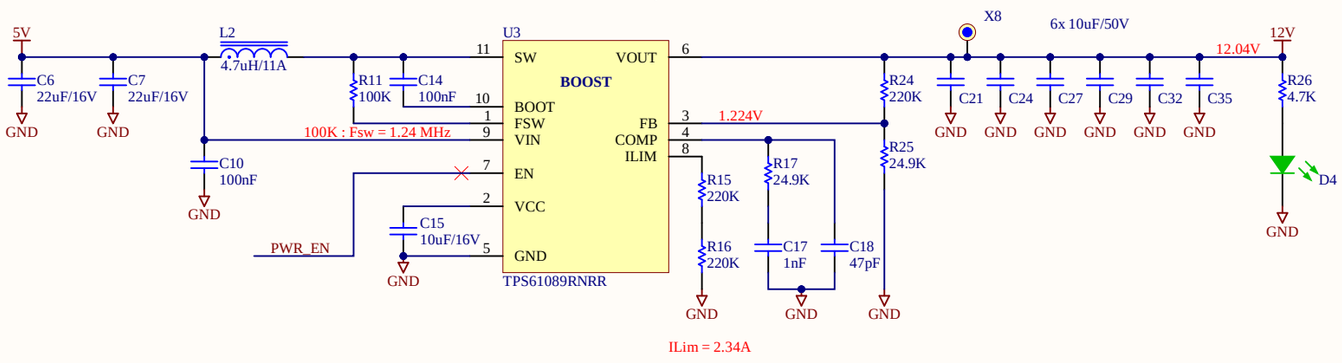

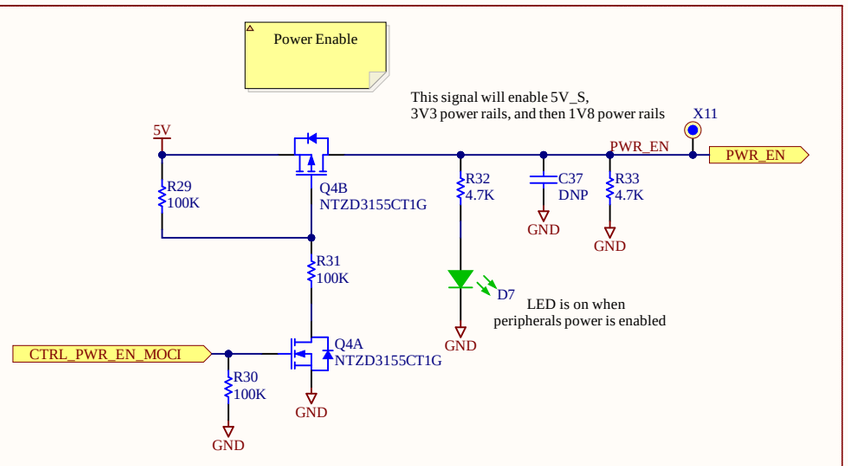

Title **47296003 - Clover V1.1**			Toradex Solutions Inc. 6415 Northwest Drive Mississauga, ON, L4V 1X1 Canada
Size: A3	Number:47296003	Revision:	
Date: 10/6/2026	Time: 3:02:56 PM	Sheet 5 of 26	
File: 120_Power_2.SchDoc			

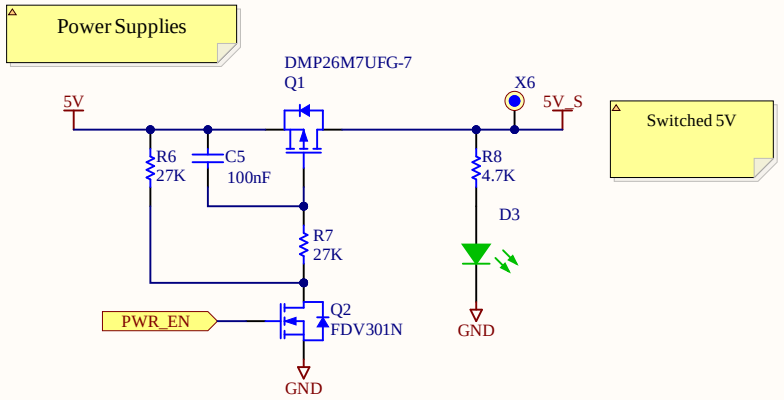

Title	**47296003 - Clover V1.1**		Toradex Solutions Inc. 6415 Northwest Drive Mississauga, ON, L4V 1X1 Canada
Size: Letter	Number: 47296003	Revision:	
Date: 10/6/2026 Time: 3:02:56 PM	Sheet 6 of 26		
File: 140_Power_3.SchDoc			

Step-Down DC/DC 5V/15A

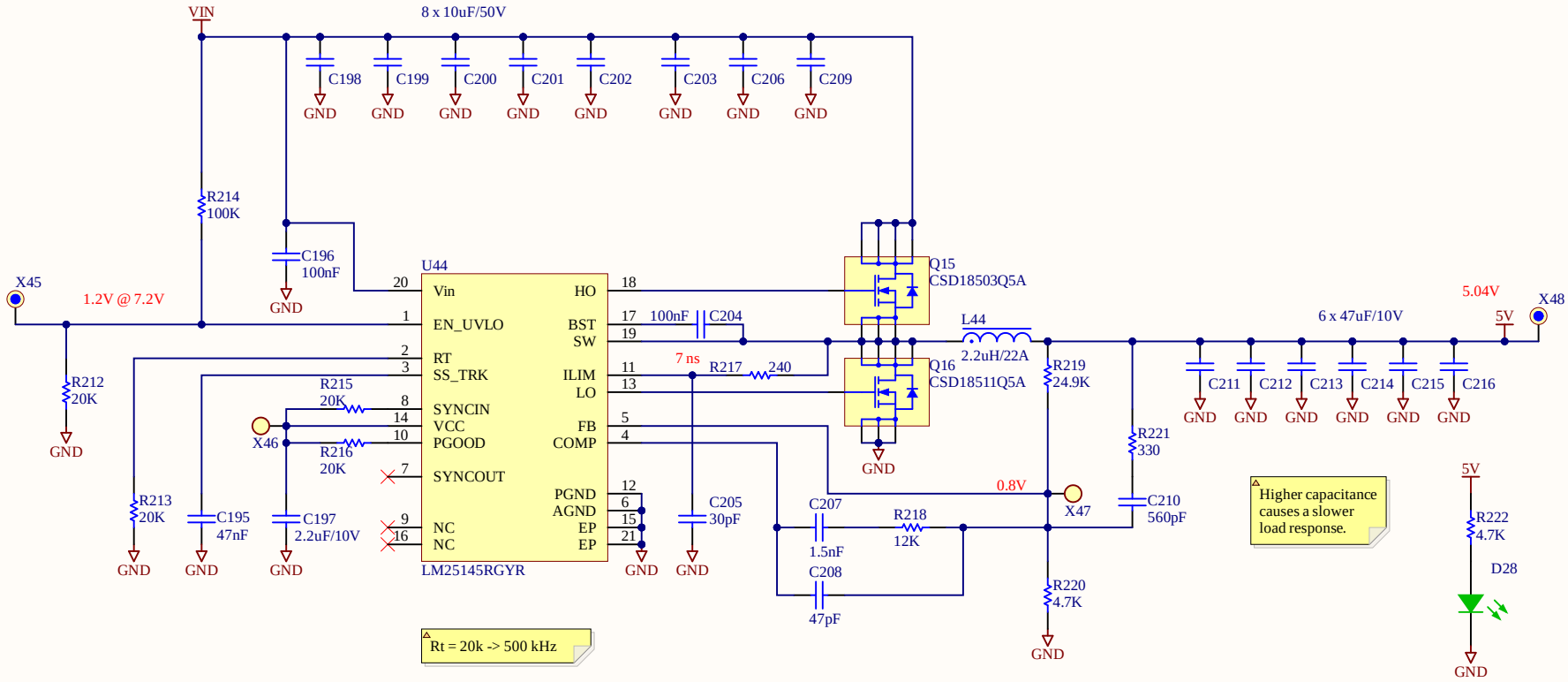

Title	47296003 - Clover V1.1		Toradex Solutions Inc. 6415 Northwest Drive Mississauga, ON, L4V 1X1 Canada
Size: Letter	Number: 47296003	Revision:	
Date: 10/6/2026	Time: 3:02:56 PM	Sheet 7 of 26	
File: 160_Power_4.SchDoc			

SOM Connector

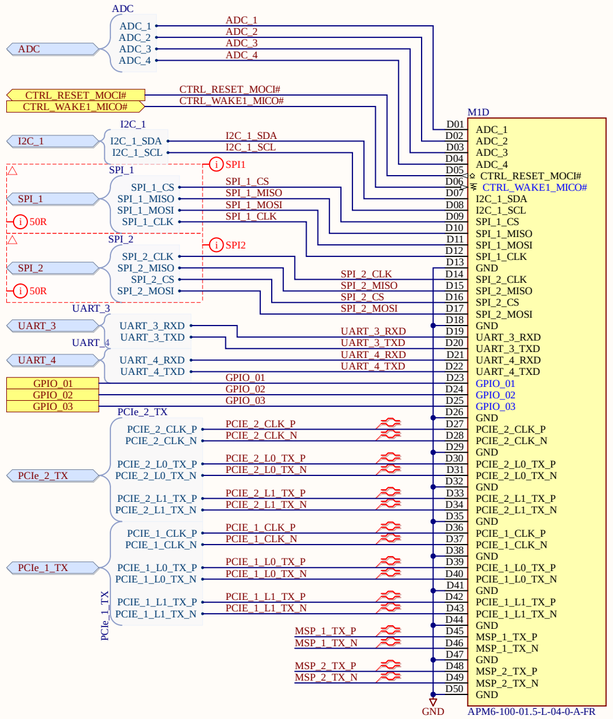

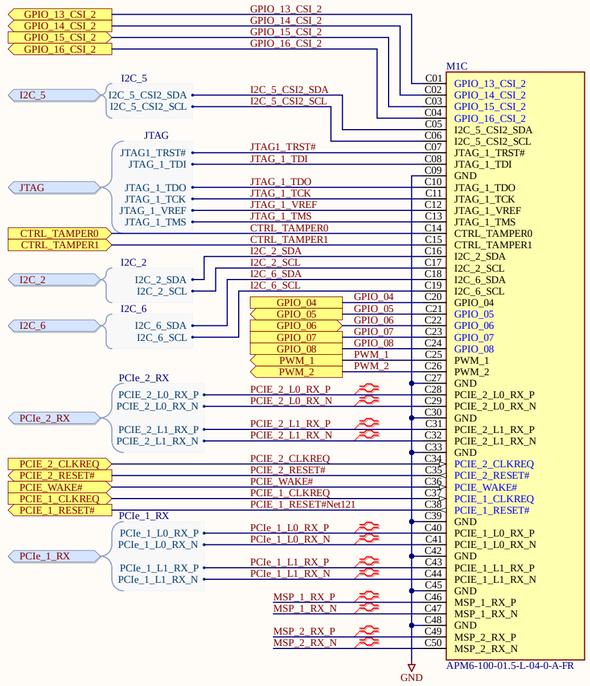

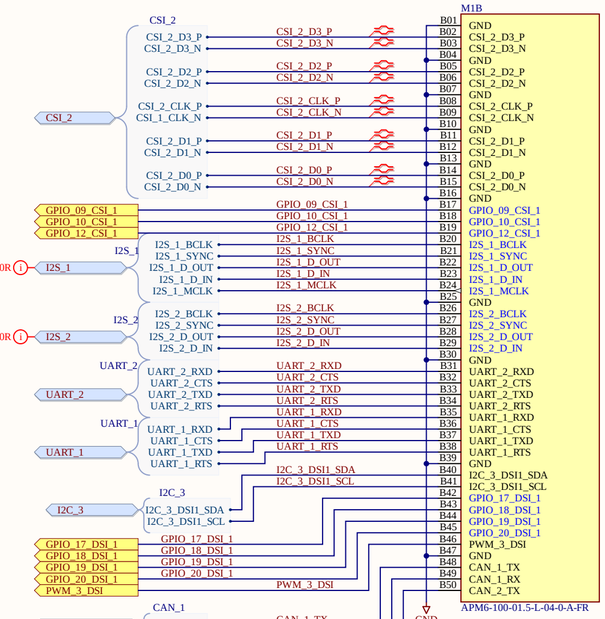

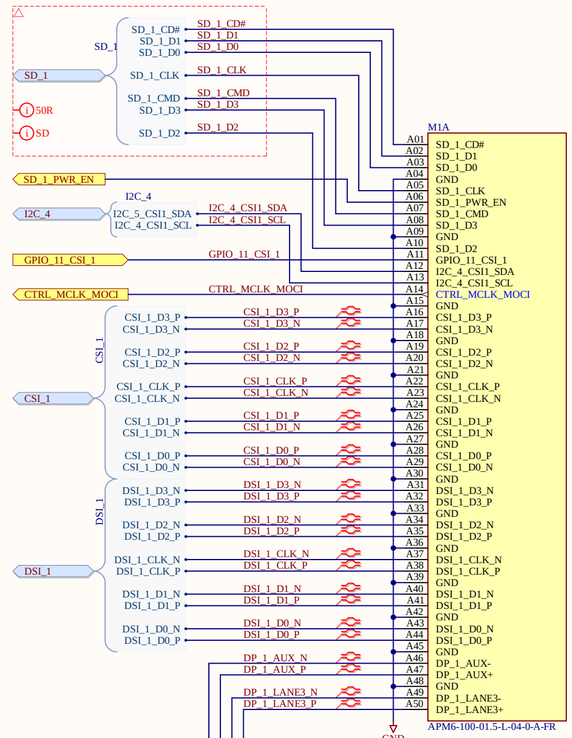

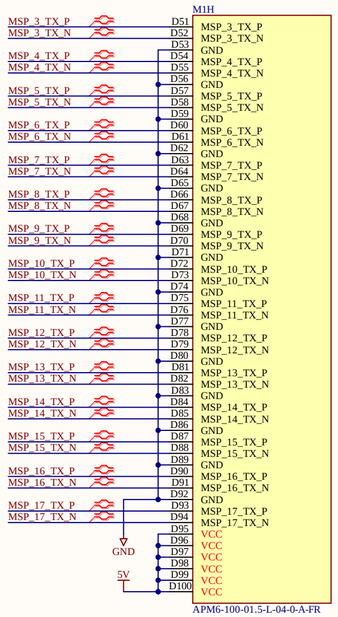

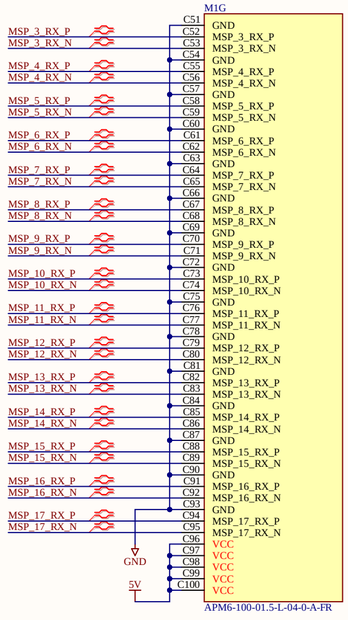

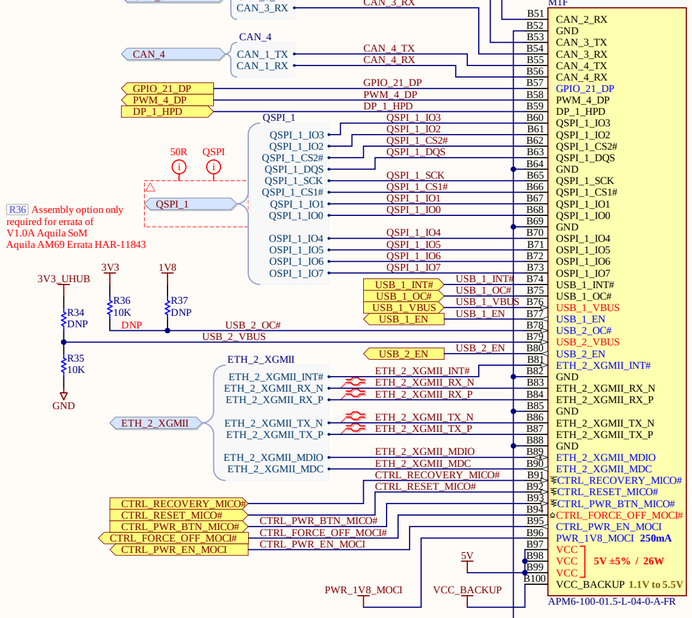

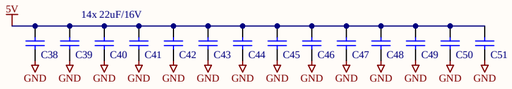

ME1 ME4

ME2 ME5

ME3 ME6

Title	47296003 - Clover V1.1	Toradex Solutions Inc. 6415 Northwest Drive Mississauga, ON, L4V 1X1 Canada	
Size: A2	Number: 47296003	Revision:	
Date: 10/6/2026	Time: 3:02:56 PM	Sheet 8 of 26	
File: 200_Aquila.SchDoc			

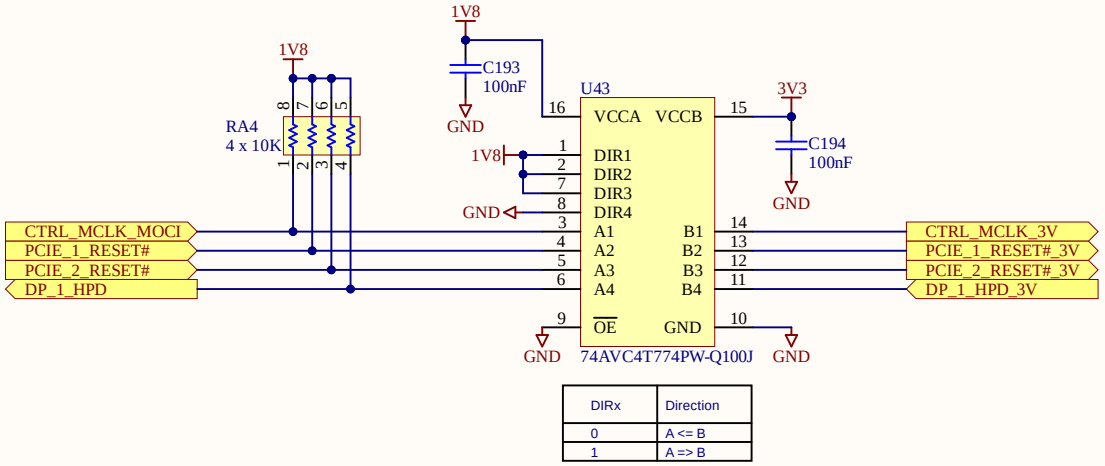

DIRx	Direction
0	A <= B
1	A => B

Translator I2C_1
1V8 <--> 3V3

1.8V ⟷ 3.3V

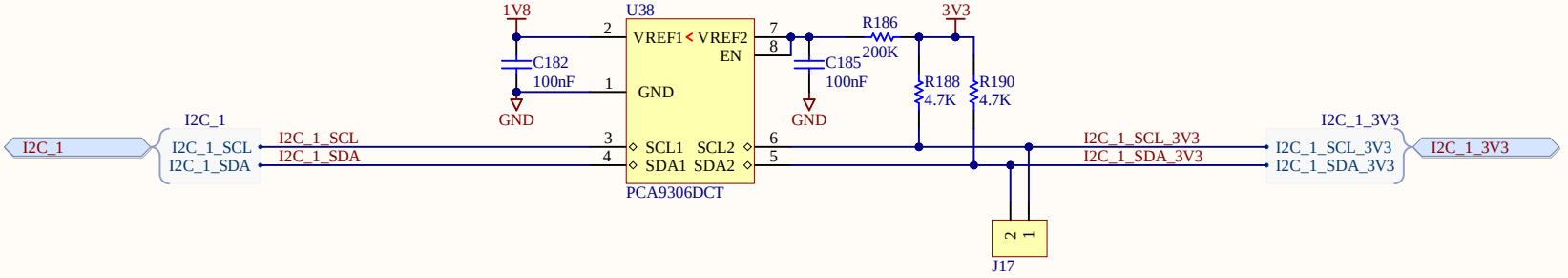

Title	**47296003 - Clover V1.1**		Toradex Solutions Inc. 6415 Northwest Drive Mississauga, ON, L4V 1X1 Canada
Size: Letter	Number: 47296003	Revision:	
Date: 10/6/2026	Time: 3:02:57 PM	Sheet 9 of 26	
File: 215_Translators2.SchDoc			

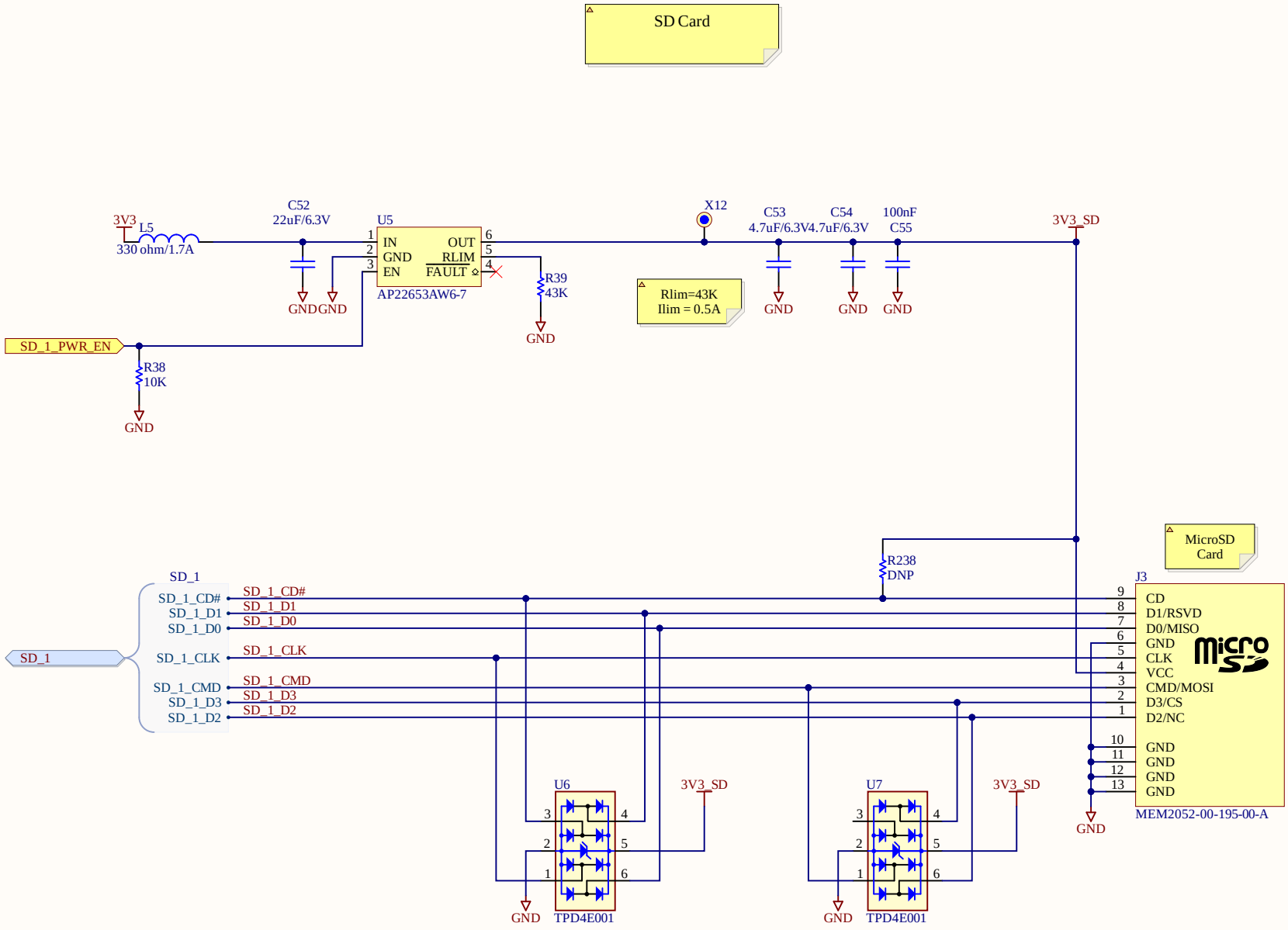

Title	**47296003 - Clover V1.1**		Toradex Solutions Inc. 6415 Northwest Drive Mississauga, ON, L4V 1X1 Canada
Size: Letter	Number: 47296003	Revision:	
Date: 10/6/2026	Time: 3:02:57 PM	Sheet 10 of 26	
File: 230_SD_Card.SchDoc			

USB1 - DRP

R61 assembled as 22 ohm resistor. This configuraiton will only work with Aquila SoM V1.1 and newer due to Aquila AM69 Errata HAR-10972. For Aquila SoM V1.0. use Clover V1.0.

USB_1_VBUS
R61 22
DNP R59 27K
1V8 R50 27K
X13
5V_S
100uF/10V C57
100uF/10V C58
U10 AP22615AWU-7 (IN, GND, EN, OUT, ISET, FLG)
FLG is low at overcurrent
R56 2K
R57 2K
Iset = 1.7A when ILIM_VBUS is low
Iset = 3.4A when ILIM_VBUS is high
4.7uF/10V C62
100nF C63
X19
USB1_VBUS
D12
120 R60
Q7 FDV301N
ILIM_VBUS
R62 100K
D10 BAT54XV2T5G
1V8 R49 10K
USB_1_OC#
3V3 R48 10K
3V3 R51 10K
R45 120
Q6A NTZD3154
Q6B NTZD3154
R52 120
5V_S L11 330 ohm/1.7A
C60 100nF
R58 0.0
C61 4.7uF/10V
5V_S R55 DNP
3V3 C56 4.7uF/10V
R53 DNP
C59 2.2uF/10V
U11 PTN5110NHQZ (VDD, BYPASS, I2C_SDA, I2C_SCL, DBG_ACC, ADDR, VCONN_IN, VBUS, EN_SRC, EN_SNK, FRS_EN, GND, ALERT/FAULT, CC1, CC2, ILIM_VBUS)
X14
R54 DNP
DNP: ADDR 0x52
USB_1_EN_SRC
X15
X16
X17
X18
USB1_CC1
USB1_CC2
U12 D3V3F4U10LP-7
U13 D3V3F4U10LP-7
J4A 12401826E412A (VBUS, DP1, DN1, DP2, DN2, SSTXP1, SSTXN1, SSRXN2, SSRXP2, SSTXP2, SSTXN2, SSRXN1, SSRXP1, CC1, CC2, SBU1, SBU2, GND)
J4B SHIELD (SH1–SH4)
C64 1nF/2KV
R64 1M/0.25W
I2C_1_3V3
I2C_1_SDA_3V3
I2C_1_SCL_3V3
1V8 R42 10K
3V3 R46 10K
USB_1_INT#
D9 BAT54XV2T5G
U8 D3V3F4U10LP-7
U9 D3V3F4U10LP-7
USB_1
USB_1_SSRX1_N / USB_1_SSRX1_P — L6 — 12 ohm/0.1A
USB_1_SSTX1_N / USB_1_SSTX1_P — L7 — 12 ohm/0.1A
USB_1_SSRX2_N / USB_1_SSRX2_P — L8 — 12 ohm/0.1A
USB_1_SSTX2_N / USB_1_SSTX2_P — L9 — 12 ohm/0.1A
USB_1_SBU1 / USB_1_SBU2
USB_1_D_P / USB_1_D_N — L10 — 90 ohm/0.4A
SSRX1_P / SSRX1_N
SSTX1_P / SSTX1_N
SSRX2_P / SSRX2_N
SSTX2_N / SSTX2_P
USB_1_P / USB_1_N

Title	47296003 - Clover V1.1		Toradex Solutions Inc. 6415 Northwest Drive Mississauga, ON, L4V 1X1 Canada
Size: A3	Number: 47296003	Revision:	
Date: 10/6/2026	Time: 3:02:57 PM	Sheet 11 of 26	
File: 300_USB1_DRP.SchDoc			

USB Hub

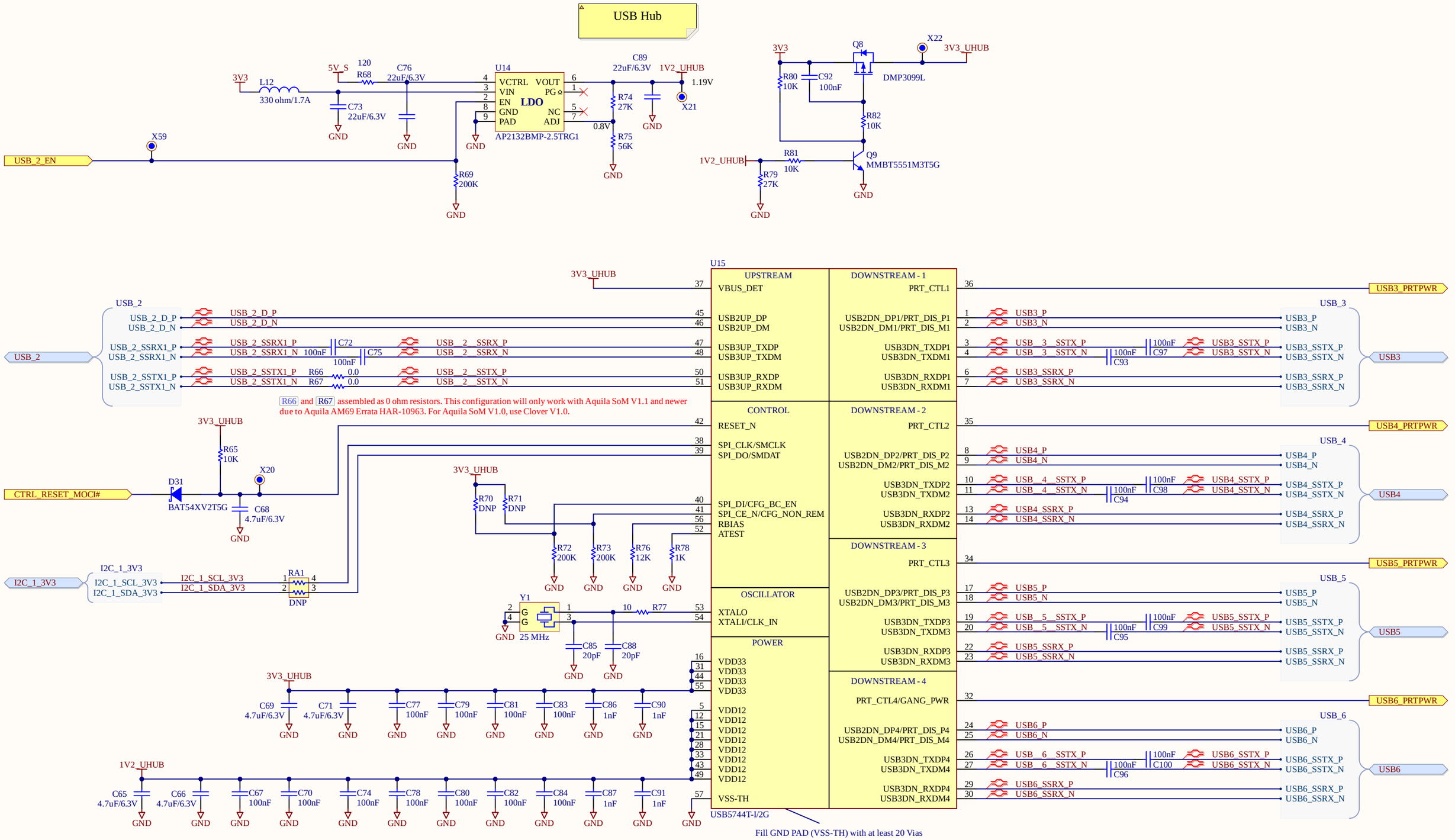

CFG_BC_EN Resistor Value	Setting
200 kΩ Pull-Down	No battery charging
200 kΩ Pull-Up	Port 1 battery charging
10 kΩ Pull-Down	Port 1, 2 battery charging
10 kΩ Pull-Up	Port 1, 2, 3 battery charging
10 Ω Pull-Down	Port 1, 2, 3, 4 battery charging

CFG_NON_REM Resistor Value	Setting
200 kΩ Pull-Down	All ports removable
200 kΩ Pull-Up	Port 1 non-removable
10 kΩ Pull-Down	Port 1, 2 non-removable
10 kΩ Pull-Up	Port 1, 2, 3 non-removable
10 Ω Pull-Down	Port 1, 2, 3, 4 non-removable

Title	47296003 - Clover V1.1		Toradex Solutions Inc. 6415 Northwest Drive Mississauga, ON, L4V 1X1 Canada
Size: A3	Number:47296003	Revision:	
Date: 10/6/2026	Time: 3:02:57 PM	Sheet 12 of 26	
File: 305_USB2_Hub.SchDoc			

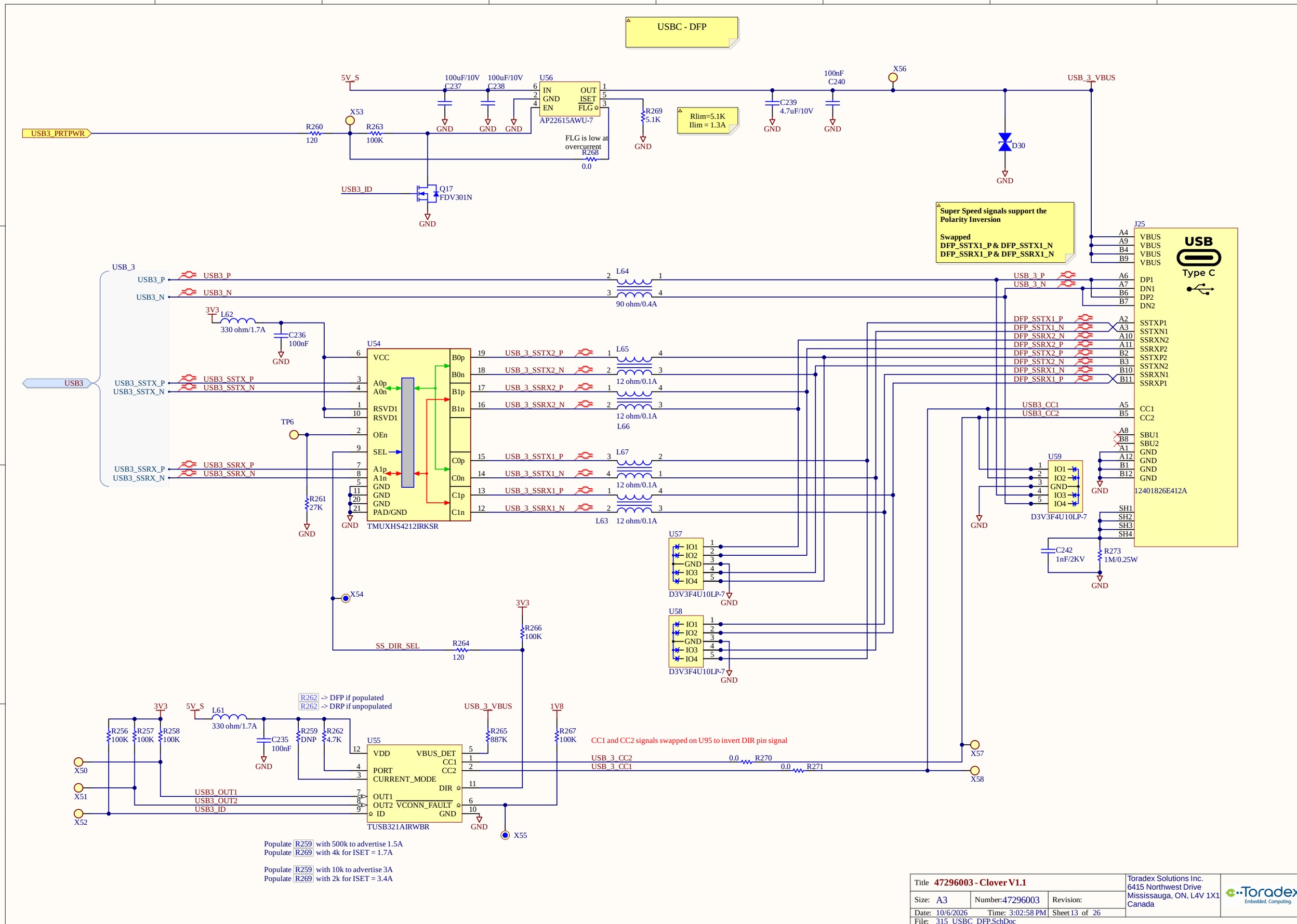

Title 47296003 - Clover V1.1			Toradex Solutions Inc. 6415 Northwest Drive Mississauga, ON, L4V 1X1 Canada
Size: A3	Number: 47296003	Revision:	
Date: 10/6/2026	Time: 3:02:58 PM	Sheet 13 of 26	
File: 315_USBC_DFP.SchDoc			

USB 3.0 Host Connector
(USB TYPE-A, Stacked)

5V_S L13 330 ohm/1.7A C101 22uF/16V U16 AP22653AW6-7 (IN, GND, EN, OUT, RLIM, FAULT) FAULT is low at overcurrent R87 24.9K R85 0.0 R83 120 X23 USB4_PRTPWR
100uF/10V C103 100uF/10V C150 100uF/10V C152 X25 C105 100nF USB4_5V
Rlim = 24.9K
Ilim = 1A

5V_S L14 330 ohm/1.7A C102 22uF/16V U17 AP22653AW6-7 (IN, GND, EN, OUT, RLIM, FAULT) FAULT is low at overcurrent R88 24.9K R86 0.0 R84 120 X24 USB5_PRTPWR
100uF/10V C104 100uF/10V C151 100uF/10V C153 X26 C106 100nF USB5_5V
Rlim = 24.9K
Ilim = 1A

USB_4: USB4_SSRX_N, USB4_SSRX_P, USB4_SSTX_N, USB4_SSTX_P, USB4_N, USB4_P
USB_5: USB5_SSRX_N, USB5_SSRX_P, USB5_SSTX_N, USB5_SSTX_P, USB5_N, USB5_P
L15, L16, L17, L18, L19, L20 — 90 ohm/0.4A

U18, U19, U20 D3V3F4U10LP-7 (IO1, IO2, GND, IO3, IO4)
D15, D16

J5A GSB4112312HR
SSRX-, SSRX+, GND DRAIN, SSTX-, SSTX+, VCC, D-, D+, GND
Type A

J5B SHIELD (S1, S2, S3, S4)
C107 1nF/2KV R91 1M/0.25W

Title	47296003 - Clover V1.1		Toradex Solutions Inc. 6415 Northwest Drive Mississauga, ON, L4V 1X1 Canada
Size: Letter	Number: 47296003	Revision:	
Date: 10/6/2026	Time: 3:02:58 PM	Sheet 14 of 26	
File: 320_USB4_5_Type-A.SchDoc			

Gbit Ethernet Connection

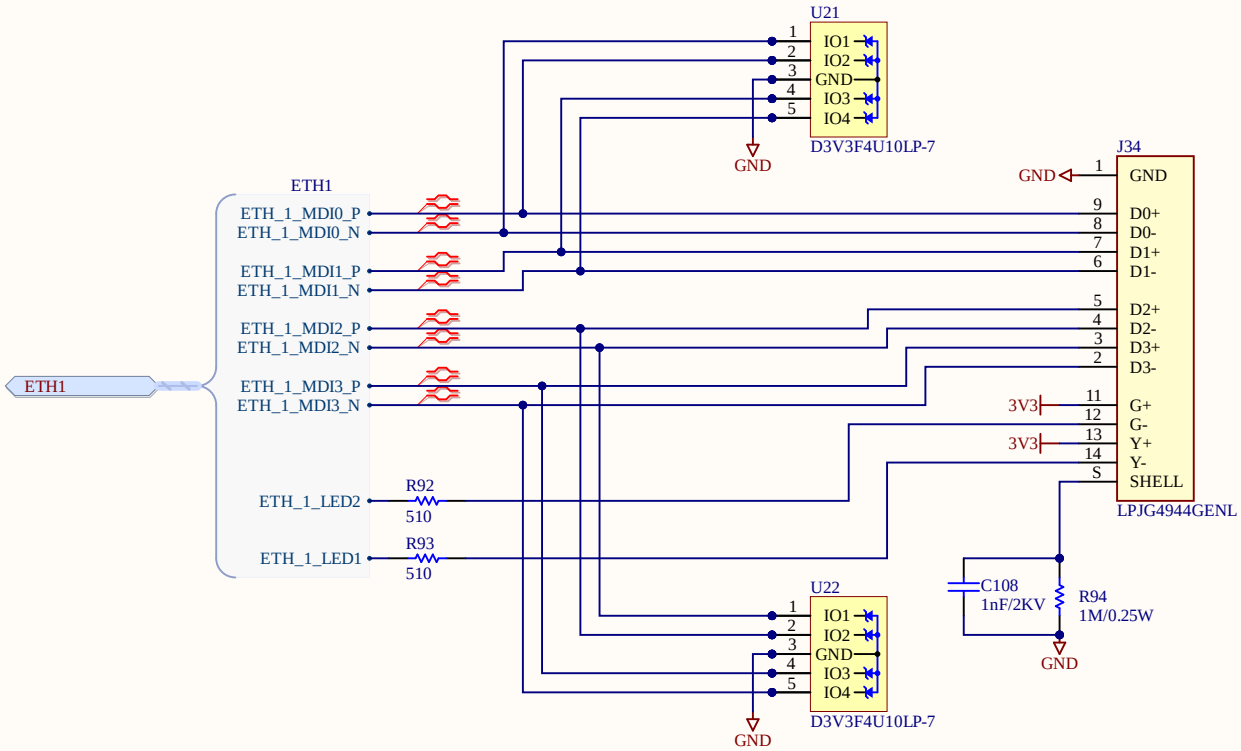

Title **47296003 - Clover V1.1**			Toradex Solutions Inc. 6415 Northwest Drive Mississauga, ON, L4V 1X1 Canada
Size: Letter	Number:47296003	Revision:	
Date: 10/6/2026 Time: 3:02:58 PM		Sheet 15 of 26	
File: 350_Ethernet.SchDoc			

Gbit Ethernet Connection

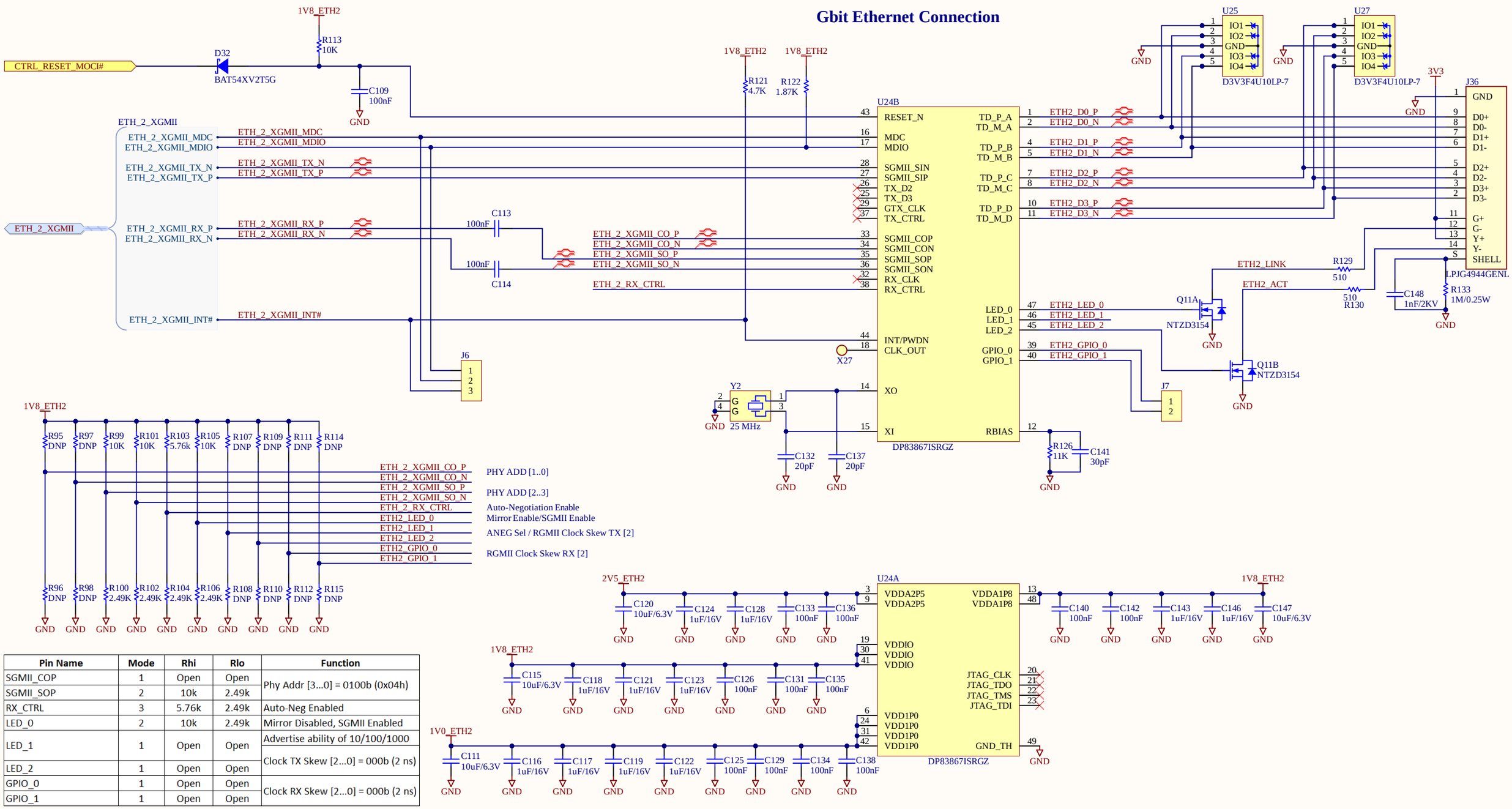

Pin Name	Mode	Rhi	Rlo	Function
SGMII_COP	1	Open	Open	Phy Addr [3...0] = 0100b (0x04h)
SGMII_SOP	2	10k	2.49k	
RX_CTRL	3	5.76k	2.49k	Auto-Neg Enabled
LED_0	2	10k	2.49k	Mirror Disabled, SGMII Enabled
LED_1	1	Open	Open	Advertise ability of 10/100/1000
LED_2	1	Open	Open	Clock TX Skew [2...0] = 000b (2 ns)
GPIO_0	1	Open	Open	Clock RX Skew [2...0] = 000b (2 ns)
GPIO_1	1	Open	Open	

ETH2 POWER

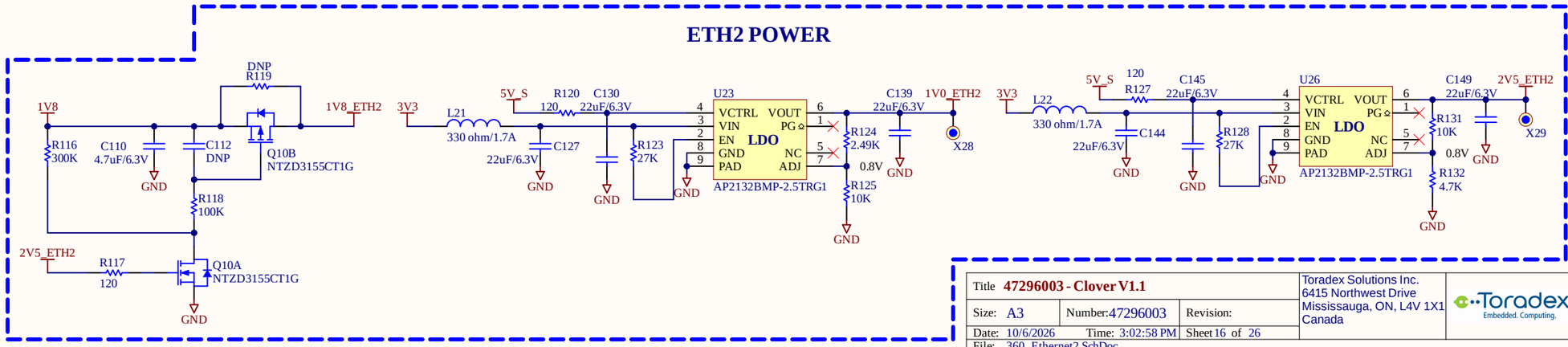

Title	47296003 - Clover V1.1		Toradex Solutions Inc. 6415 Northwest Drive Mississauga, ON, L4V 1X1 Canada
Size: A3	Number:47296003	Revision:	
Date: 10/6/2026	Time: 3:02:58 PM	Sheet 16 of 26	
File: 360_Ethernet2.SchDoc			

M.2 Key B
WWAN Module

3V3 — L23 330 ohm/1.7A — X33 — M2B_3V3
330 ohm/1.7A L24

M2B_3V3 2x 100uF/6.3V 2x 10uF/6.3V
C155 C160 C162 C164 C244 C246
100nF 100nF
GND GND GND GND GND GND

M2B_3V3 2x 100uF/6.3V 3x 10uF/6.3V
C154 C159 C161 C163 C243 C245 C247
100nF 100nF
GND GND GND GND GND GND GND

M2B_3V3
C156 100nF C157 100nF
GND

Signal switch for PCIE_2_L1_xxx to USB6_SS
U30
TMUXHS4212IRKSR

6	VCC	B0p	19 — PCIE_2_L1_TX_P
3	A0p	B0n	18 — PCIE_2_L1_TX_N
4	A0n	B1p	17 — PCIE_2_L1_RX_P
1, 10	RSVD1, RSVD1	B1n	16 — PCIE_2_L1_RX_N
2	OEn		
9	SEL		
7	A1p	C0p	15 — USB6_SSTX_P
8	A1n	C0n	14 — USB6_SSTX_N
5	GND	C1p	13 — USB6_SSRX_P
11	GND	C1n	12 — USB6_SSRX_N
20	GND		
21	PAD/GND		

A0_P, A0_N
A1_P, A1_N
TP5
GND — R147 27K — 2
PCIE/USB3_SEL — X36 — 9
PCIE/USB3_SEL low when PCIe is selected
PCIE/USB3_SEL high when USB3 selected
R145 86.6K
GND

USB_6: USB6_SSTX_P, USB6_SSTX_N, USB6_SSRX_P, USB6_SSRX_N → USB6
USB6_P, USB6_N

PCIe_2_TX
PCIE_2_CLK_P, PCIE_2_CLK_N
PCIE_2_L0_TX_P, PCIE_2_L0_TX_N
PCIE_2_L1_TX_P, PCIE_2_L1_TX_N
PCIe_2_TX

PCIe_2_RX
PCIE_2_L0_RX_P, PCIE_2_L0_RX_N
PCIE_2_L1_RX_P, PCIE_2_L1_RX_N
PCIe_2_RX

J8

USB6_P	7	2	3V3
USB6_N	9	4	3V3
		70	3V3/VBAT
PCIE_2_L0_TX_P	49	72	3V3/VBAT
PCIE_2_L0_TX_N	47	74	3V3/VBAT
PCIE_2_L0_RX_P	43	37	PETp1/USB3.1-Tx+/SSIC-TxP
PCIE_2_L0_RX_N	41	35	PETn1/USB3.1-Tx-/SSIC-TxN
PCIE_2_CLK_P	55	31	PERp1/USB3.1-Rx+/SSIC-RxP
PCIE_2_CLK_N	53	29	PERn1/USB3.1-Rx-/SSIC-RxN
PCIE_2_RESET#_3V	50	36	UIM-PWR
CLKRQ_M2B#	52	34	UIM-DATA
PEWAKE_M2B#	54	32	UIM-CLK
	40	30	UIM-RESET
	42	66	SIM_DETECT
GND — 0.0 R142	38	60	COEX3
	25	62	COEX_TXD
	44	64	COEX_RXD
		68	SUSCLK(32kHz)
GPIO_3	46	6	FULL_CARD_POWER_OFF#
GPIO_4	48	10	GPIO_9/DAS/DSS/LED_1#
I2S_2_BCLK	20	8	W_DISABLE#
I2S_2_D_OUT	22	67	RESET#
I2S_2_D_IN	24		
I2S_2_SYNC	28	56	NC
GPIO_10	26	58	NC
GPIO_11	23		
	59	3	GND
	61	5	GND
	63	11	GND
	65	27	GND
		33	GND
		39	GND
		45	GND
		51	GND
		57	GND
		71	GND
		73	GND
CONFIG_0	21		
CONFIG_1	69		
CONFIG_2	75		
CONFIG_3	1		

KEY B
3V3
1V8
MDT420B01001

M.2 cards of sizes 30x42mm and 30x52mm

J26: 1 GPIO_3, 2 GPIO_4, 3 I2S_2, 4 GPIO_10, GPIO_11

X30 — PCIE_2_RESET#_3V
X31 — PCIE_2_CLKREQ — R134 27K DNP R138 DNP D17 BAT54C — 1V8 M2B_3V3 — 0.0 R136
X32 — PCIE_WAKE# — R135 10K DNP R139 DNP D18 BAT54C — 1V8 M2B_3V3 — 0.0 R137
X34 — R143 10K — M2B_3V3
X35 — R144 10K — M2B_3V3
R141 10K — M2B_3V3
Q12 FDV301N — GND

U28 SN74AUP1G08DCKR
M2B_3V3, PCIE/USB3_SEL

PCIE/USB3_SEL low when PCIe is selected
PCIE/USB3_SEL high when USB3 selected

Micro SIM

J9 — SIM Card

VCC	C1
RESET	C2
CLOCK	C3
RES/AUX1	C4
GND	C5
VPP	C6
I/O	C7
RES/AUX2	C8
GND	9

UIM_PWR, UIM_RST, UIM_CLK, UIM_DATA
C158 100nF — GND
U29 TPD4E001 — GND
DNP R146

M2B_3V3 1V8
R148 1.87K R149 1.87K R150 27K R151 27K
D20

Standoffs - 0.5mm
GND ME8 9774005243R
GND ME9 9774005243R
GND ME10 9774005243R

Title	47296003 - Clover V1.1		Toradex Solutions Inc. 6415 Northwest Drive Mississauga, ON, L4V 1X1 Canada
Size: A3	Number: 47296003	Revision:	
Date: 10/6/2026	Time: 3:02:59 PM	Sheet 17 of 26	
File: 400_M2_KeyB.SchDoc			

M.2 Key M SSD

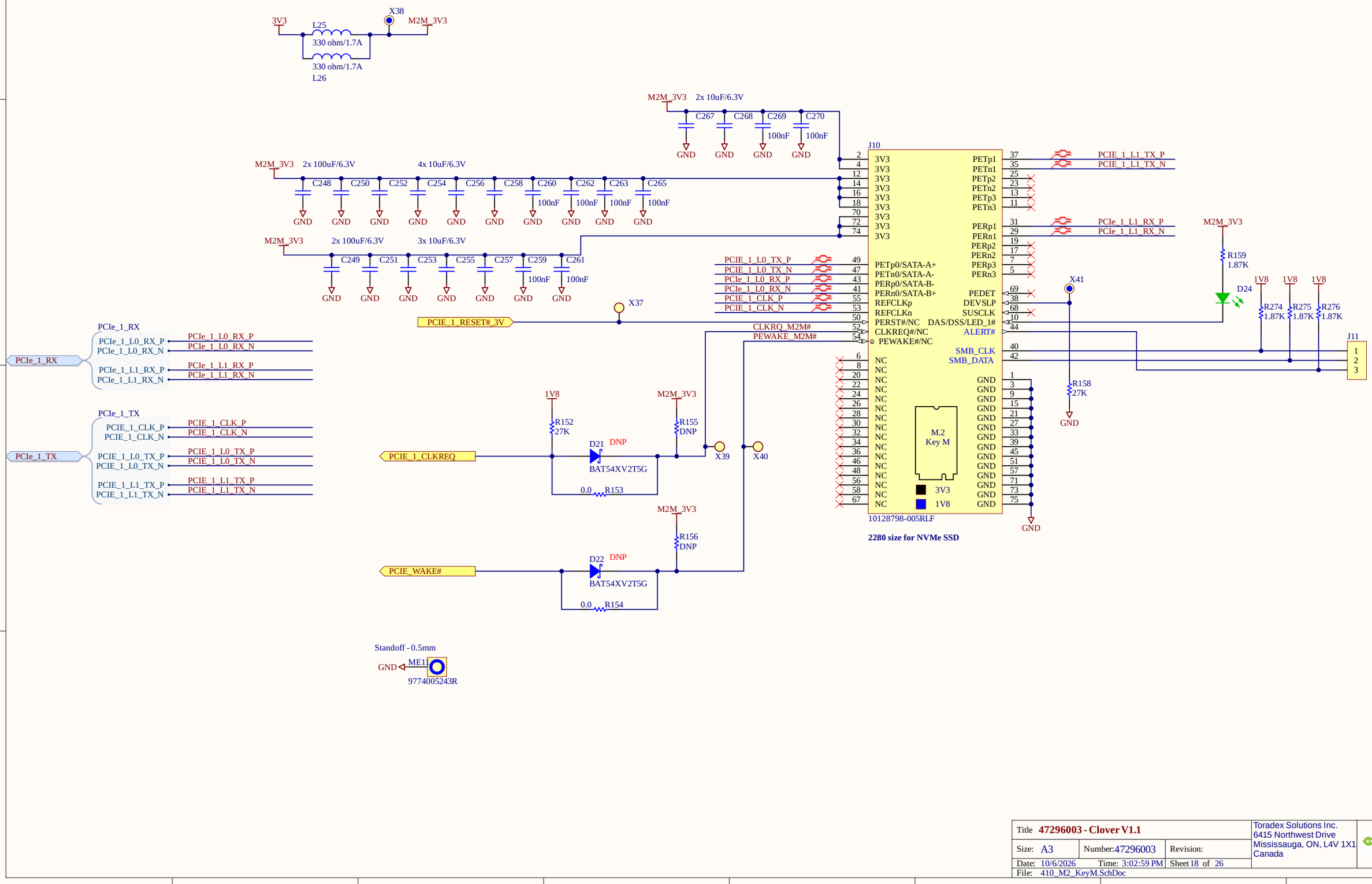

Title	47296003 - Clover V1.1		Toradex Solutions Inc. 6415 Northwest Drive Mississauga, ON, L4V 1X1 Canada
Size: A3	Number: 47296003	Revision:	
Date: 10/6/2026	Time: 3:02:59 PM	Sheet 18 of 26	
File: 410_M2_KeyM.SchDoc			

MIPI DSI

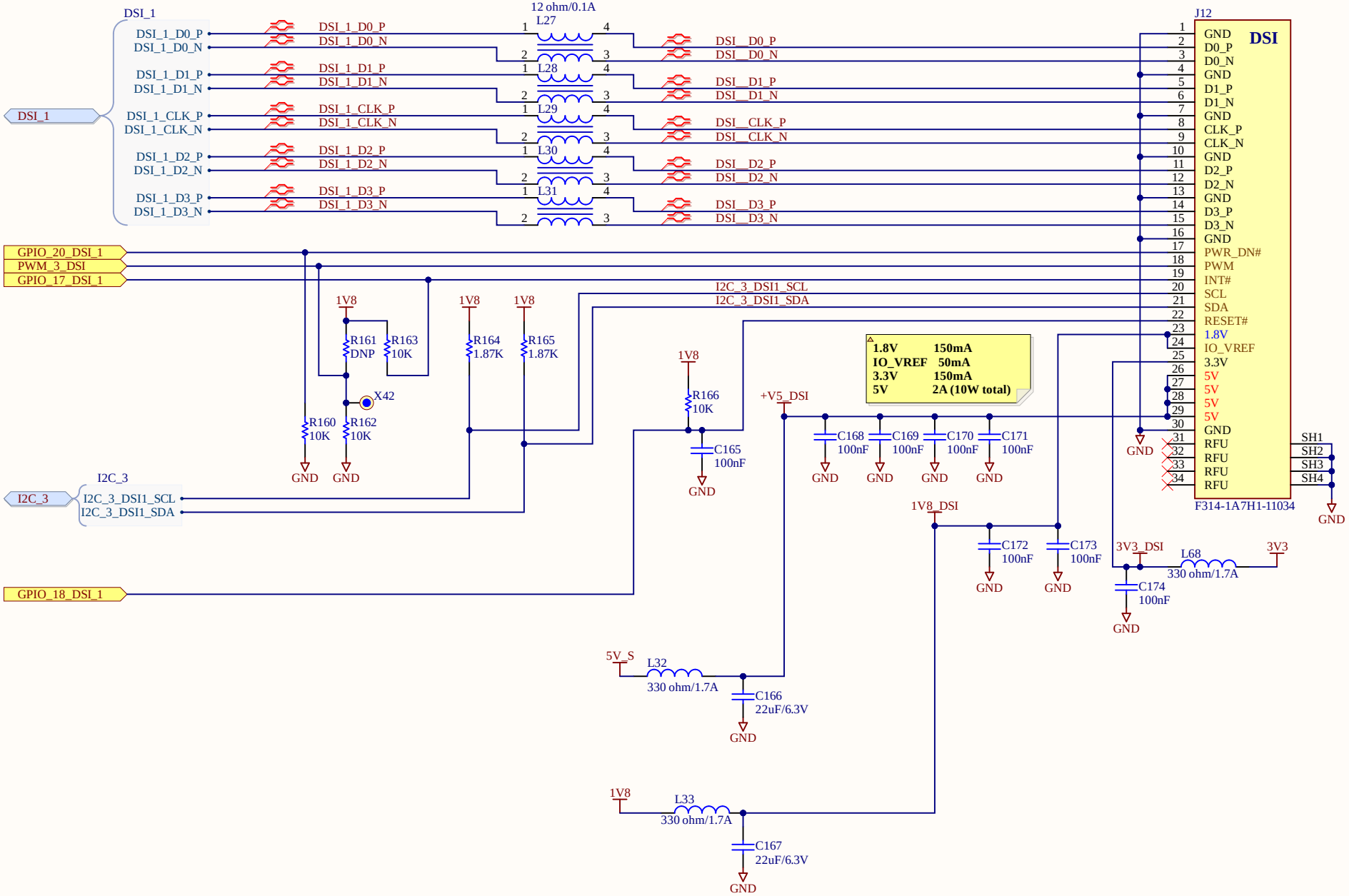

Title	**47296003 - Clover V1.1**		Toradex Solutions Inc. 6415 Northwest Drive Mississauga, ON, L4V 1X1 Canada
Size: Letter	Number: 47296003	Revision:	
Date: 10/6/2026	Time: 3:02:59 PM	Sheet 19 of 26	
File: 420_MIPI_DSI.SchDoc			

MIPI CSI_1

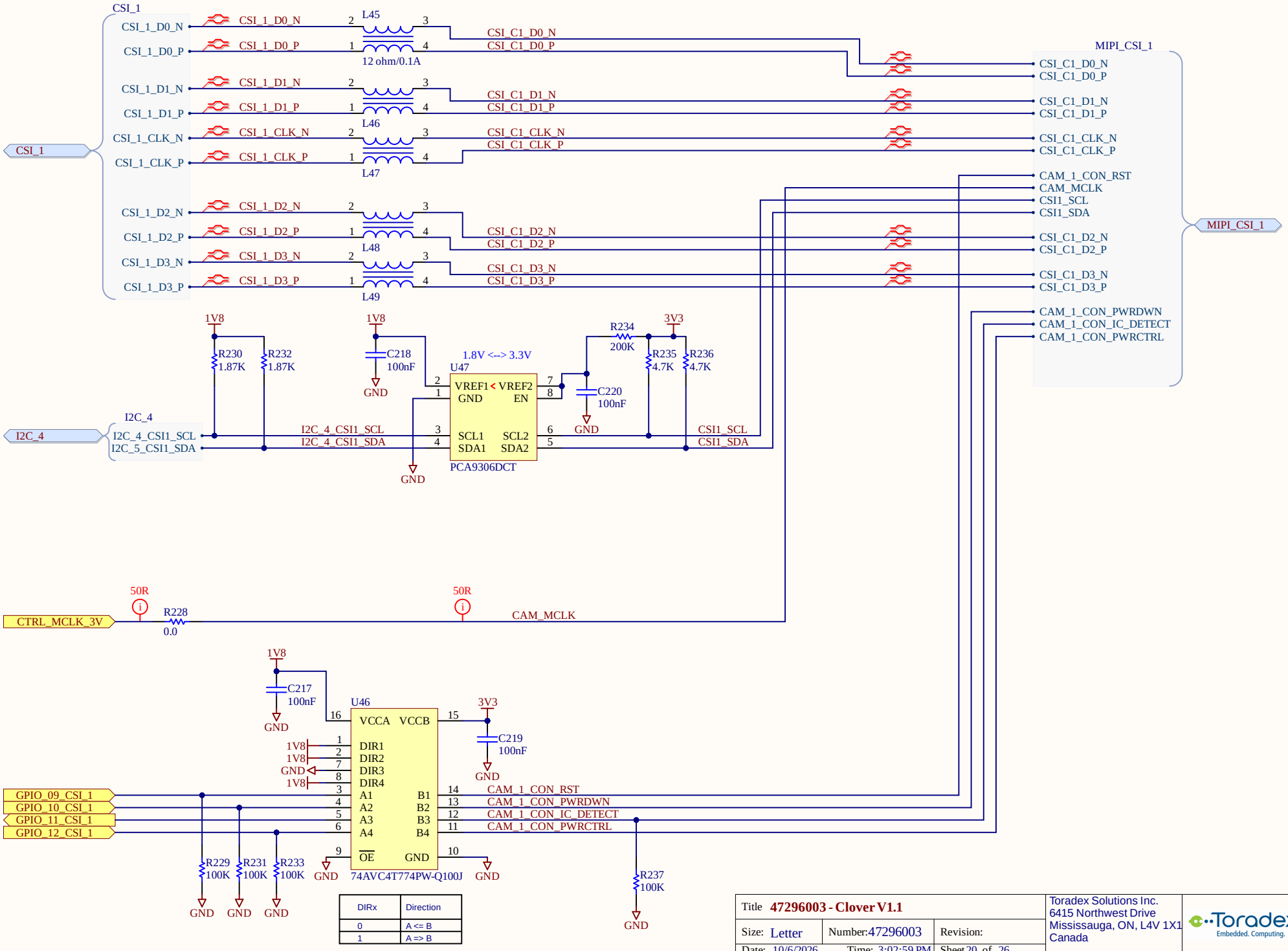

DIRx	Direction
0	A <= B
1	A => B

Title	47296003 - Clover V1.1		
Size: Letter	Number: 47296003	Revision:	
Date: 10/6/2026	Time: 3:02:59 PM	Sheet 20 of 26	
File: 445_CSI_1.SchDoc			

Toradex Solutions Inc.
6415 Northwest Drive
Mississauga, ON, L4V 1X1
Canada

Toradex Embedded. Computing.

MIPI CSI_2

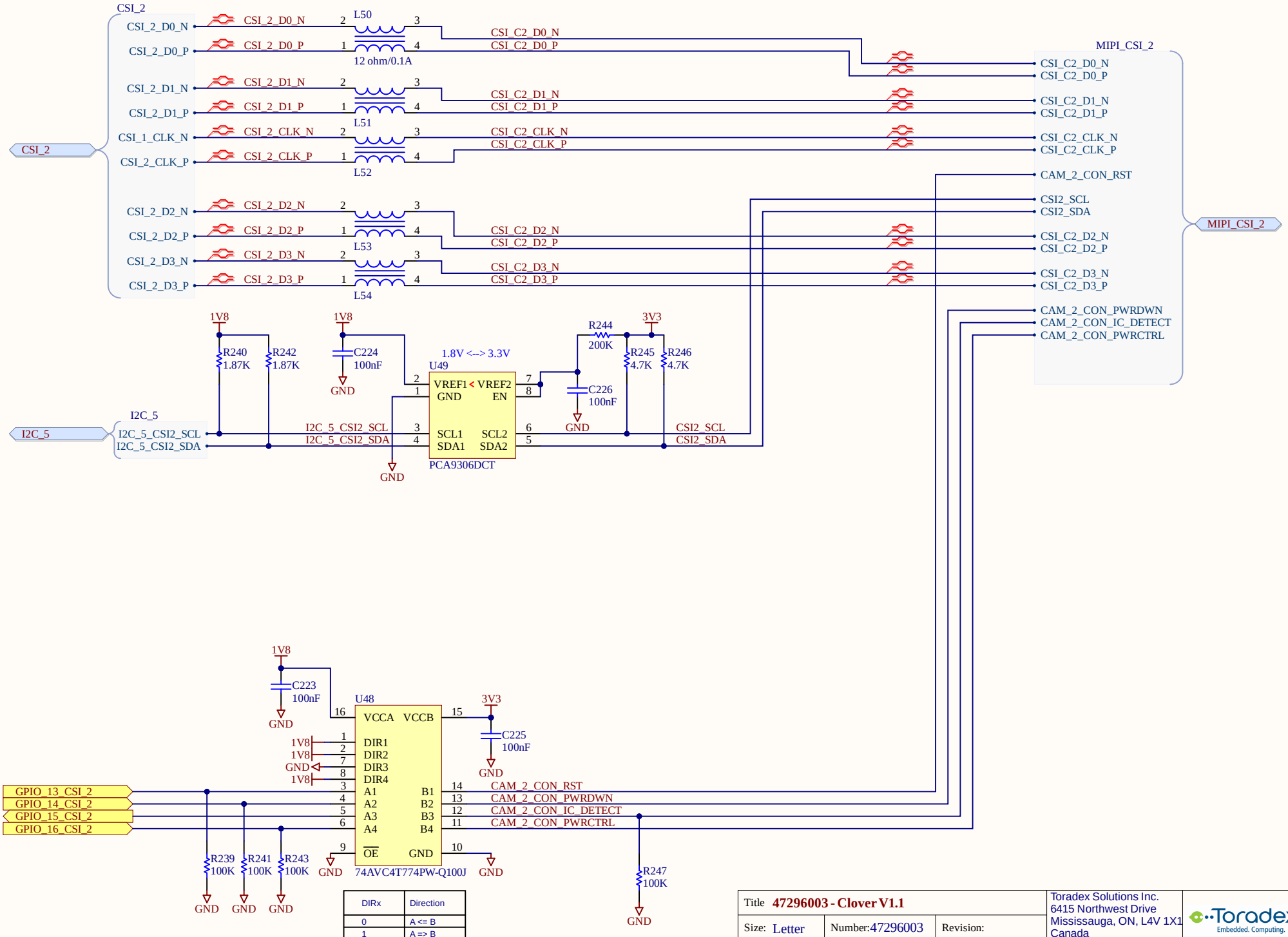

DIRx	Direction
0	A <= B
1	A => B

Title	47296003 - Clover V1.1		Toradex Solutions Inc. 6415 Northwest Drive Mississauga, ON, L4V 1X1 Canada
Size: Letter	Number: 47296003	Revision:	
Date: 10/6/2026	Time: 3:02:59 PM	Sheet 21 of 26	
File: 450_CSI_2.SchDoc			

Non-isolated CAN

5V_S L34 5V_CAN_A
330 ohm/1.7A
1V8 L35 1V8_CAN_A
330 ohm/1.7A

5V_CAN_A
C178 100nF
C179 1uF/16V
GND GND
1V8_CAN_A
U31
TCAN1044VDRQ1
1V8 Logic levels
R167 10K
CAN_1
CAN_1_TX
CAN_1_RX
CAN_1
TXD
STB
RXD
VIO
VCC
CAN-H
CAN-L
GND
CAN1_H
CAN1_L
C175 100nF
GND
GND
J14 Jumper
R169 120
L36
220 ohm/0.3A
CAN_1_H
CAN_1_L
U33
GND
ESDCAN06-2BWY

5V_CAN_A
C177 100nF
C180 1uF/16V
GND GND
1V8_CAN_A
U32
TCAN1044VDRQ1
1V8 Logic levels
R168 10K
CAN_2
CAN_2_TX
CAN_2_RX
CAN_2
TXD
STB
RXD
VIO
VCC
CAN-H
CAN-L
GND
CAN2_H
CAN2_L
C176 100nF
GND
GND
J15 Jumper
R170 120
L37
220 ohm/0.3A
CAN_2_H
CAN_2_L
U34
GND
ESDCAN06-2BWY

CAN_3
CAN_3_TX
CAN_3_RX
CAN_3
CAN_3_TX
CAN_3_RX

CAN_4
CAN_1_TX
CAN_1_RX
CAN_4
CAN_4_TX
CAN_4_RX

CAN Connector

5V_CAN_A
J13
CAN_4_TX 1 2 CAN_4_RX
CAN_3_TX 3 4 CAN_3_RX
5 6
CAN_2_H 7 8 CAN_2_L
CAN_1_H 9 10 CAN_1_L
61301021821
GND

Title	47296003 - Clover V1.1		Toradex Solutions Inc. 6415 Northwest Drive Mississauga, ON, L4V 1X1 Canada
Size: Letter	Number: 47296003	Revision:	
Date: 10/6/2026	Time: 3:02:59 PM	Sheet 23 of 26	
File: 500_CAN.SchDoc			

Peripherals

Temperature Sensor

U35 TMP1075DSGR
Adr 0x4F

I2C_1_SCL
I2C_1_SDA
1V8
R171 0.0
R172 0.0
R173 0.0
R174 DNP
R175 DNP
R176 DNP
SCL
SDA
ALERT
A0
A1
A2
Vs
GND
GND(PAD)
C184 100nF
GND

Battery Holder for RTC power

XB1
GND +VBAT
Battery Holder
3030TR
CR927, CR1025
VCC_BACKUP
R195 1.87K
X43
GND

Reset Button

CTRL_RESET_MICO#
D25 D5V0L1B2S9-7
S1
SH1
SH2
GND

Recovery Button

CTRL_RECOVERY_MICO#
D27 D5V0L1B2S9-7
S2
SH1
SH2
GND

Reset LED

LED is on when module is in reset state
5V
R206 4.7K
R205 10K
D26
CTRL_RESET_MOCI#

EEPROM 256B

Adr: 0x57
U36 M24C02-FDW6TP
1V8
R177 0.0
R178 0.0
R179 0.0
R180 DNP
R181 DNP
R182 DNP
A0
A1
A2
VSS
VCC
WE
SCL
SDA
L40 330 ohm/1.7A
C183 100nF
GND
I2C_1_SDA
I2C_1_SCL
I2C_1

TPM 2.0

U60 SLM9670AQ20FW1311XTMA1
TPM
L69 330 ohm/1.7A
C264 100nF
R281 10K
R282 10K
X60
X61
D33 BAT54XV2T5G
C266 100nF
C271 100nF
SPI_1_MISO
SPI_1_MOSI
SPI_1_CLK
SPI_1_CS
SPI_1
GPIO_05
GPIO_06
CTRL_RESET_MOCI#

SPI Flash

U40 MX25U25645GXDI00
L43 330 ohm/1.7A
C188 4.7uF/6.3V
C189 100nF
C190 100nF
C191 100nF
R199 10K
R201 10K
R208 10K
VCC_FLASH
QSPI_1_DQS
QSPI_1_IO0
QSPI_1_IO1
QSPI_1_IO2
QSPI_1_IO3
QSPI_1_IO4
QSPI_1_IO5
QSPI_1_IO6
QSPI_1_IO7
QSPI_1_SCK
QSPI_1_CS2#
QSPI_1_CS1#
R210 DNP
R211 0.0
QSPI
50R

Translator I2C_1 1V8 <--> 5V

1.8V ↔ 5V
U37 PCA9306DCT
R183 1.87K
R184 1.87K
C181 100nF
C186 100nF
R185 200K
R187 4.7K
R189 4.7K
J16

Fan

U39 AMC6821SDBQR
Addr: 0x18
PWM-MODE: 1 kHz to 40 kHz PWM
C187 100nF
R191 0.0
R192 0.0
R193 DNP
R194 DNP
R196 10K
R197 10K
R198 10K
R200 10K
R202 4.7K
R203 10K
R204 10K
X44
TP1
TP2
TP3
TP4
SMBALERT#
PWM_OUT
I2C1_SDA_FAN_5V
I2C1_SCL_FAN_5V

Fan Sel Jumper

1-2: 4 wire fan (or 3 wire w/o PWM)
2-3: 3 wire fan (PWM)
J19 Jumper
PWM_OUT_4WIRE
PWM_OUT_3WIRE
R207 1.87K
R209 1.87K
5V_S
12V
U41 PESD15VL2BT,215
U42 PESD15VL2BT,215
J20 0470531000
C192 100nF
Q14 IRLML0040

Title	47296003 - Clover V1.1
Size: A3	Number:47296003 Revision:
Date: 10/6/2026	Time: 3:03:00 PM Sheet 24 of 26
File: 600_Peripherals.SchDoc	

Toradex Solutions Inc.
6415 Northwest Drive
Mississauga, ON, L4V 1X1
Canada

Toradex Embedded. Computing.

Main expansion connectors

Header 1

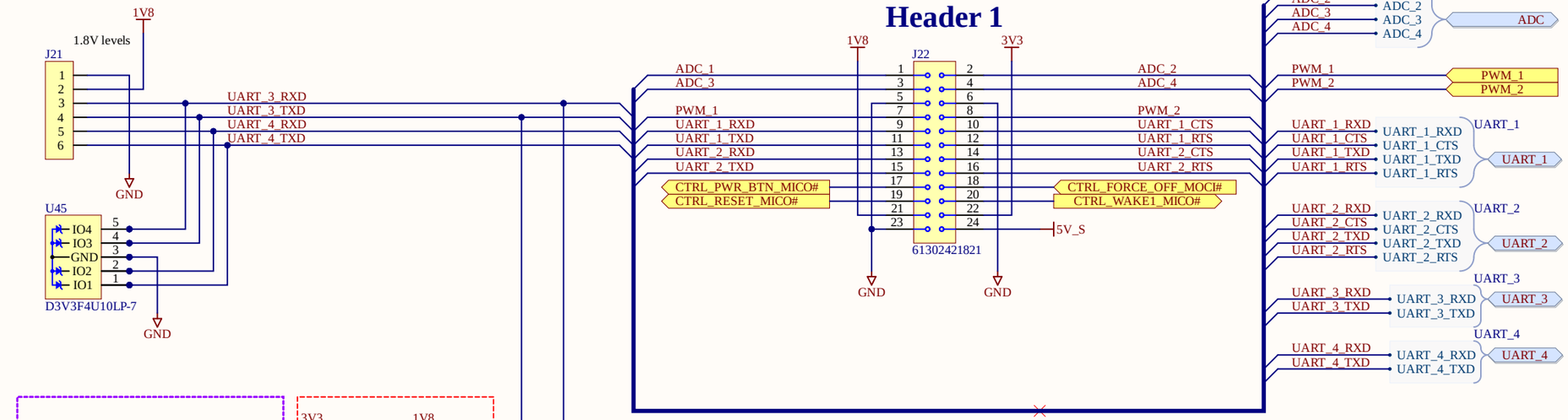

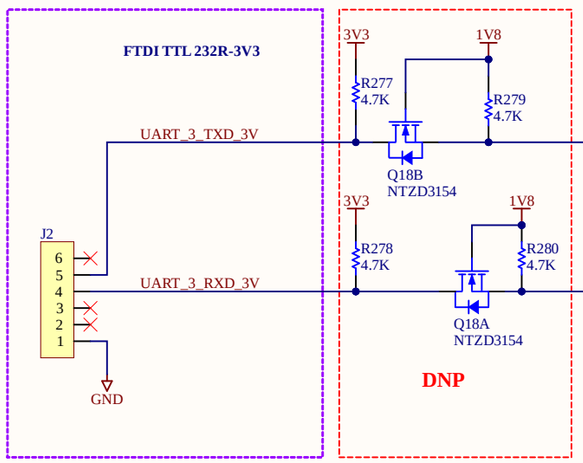

Header 2

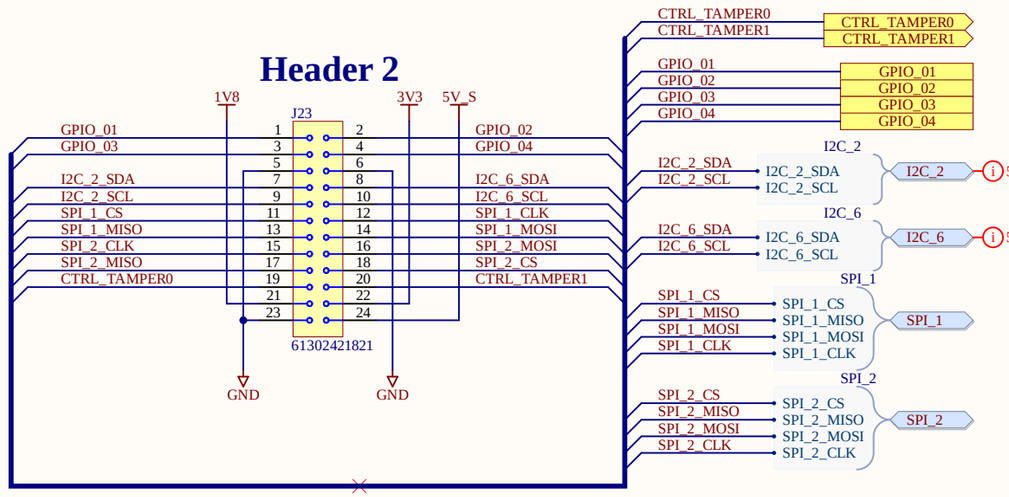

JTAG

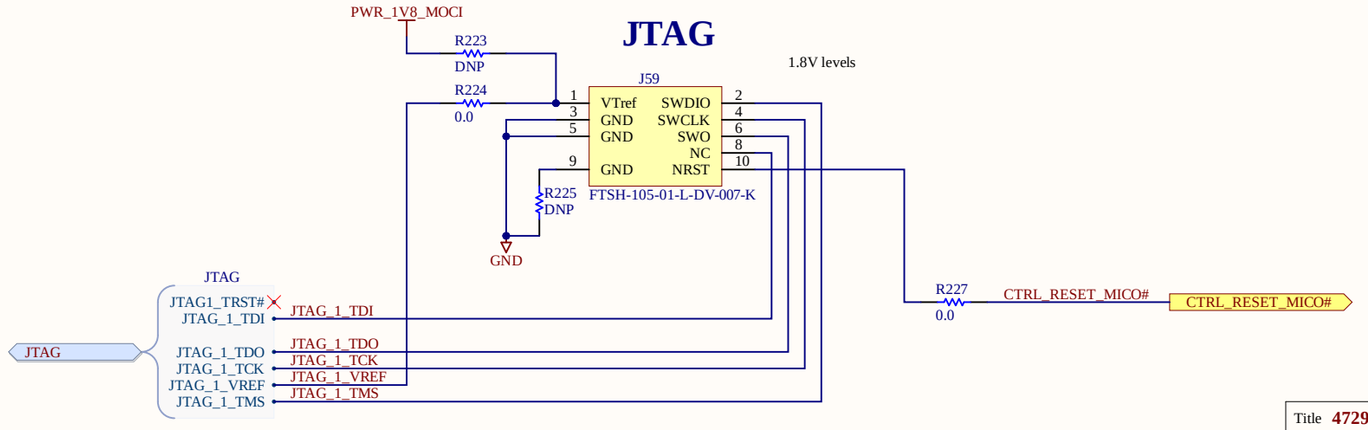

Title: 47296003 - Clover V1.1			Toradex Solutions Inc. 6415 Northwest Drive Mississauga, ON, L4V 1X1 Canada
Size: A3	Number: 47296003	Revision:	
Date: 10/6/2026	Time: 3:03:00 PM	Sheet 25 of 26	
File: 800_Headers.SchDoc			

Display Port

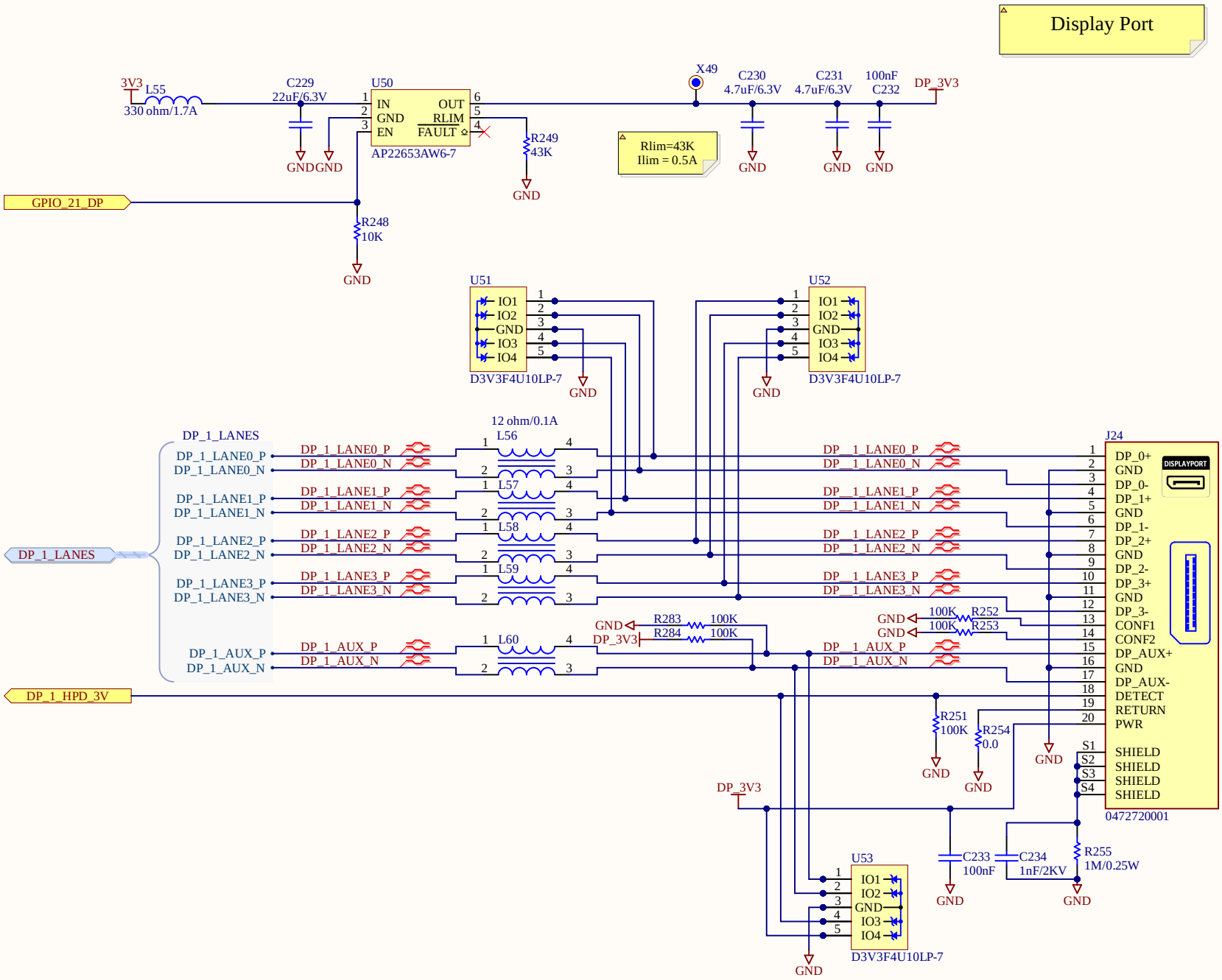

Title	**47296003 - Clover V1.1**		Toradex Solutions Inc. 6415 Northwest Drive Mississauga, ON, L4V 1X1 Canada
Size: Letter	Number: 47296003	Revision:	
Date: 10/6/2026	Time: 3:03:00 PM	Sheet 26 of 26	
File: 900_Display_Port.SchDoc			

MIPI CSI BergStak® Connector

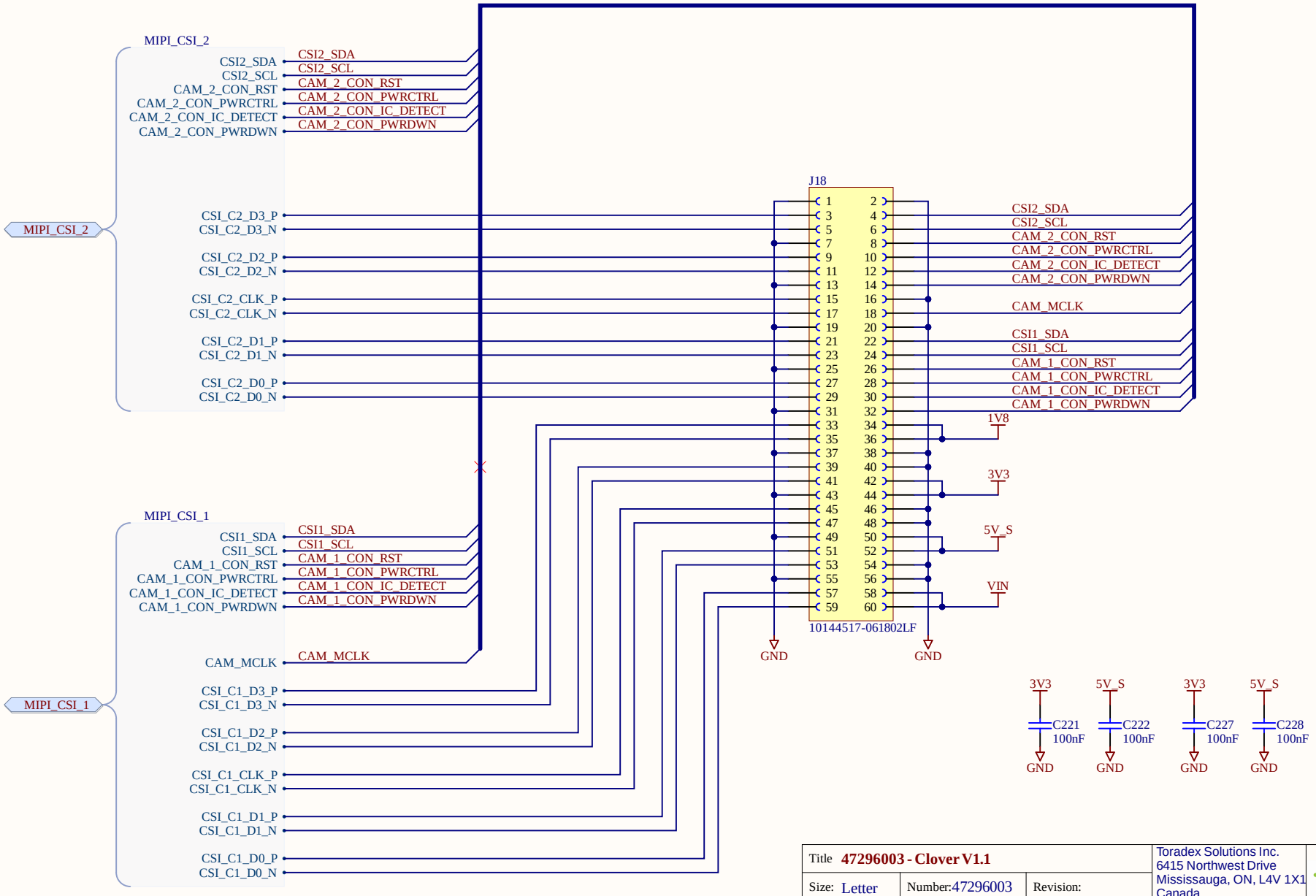

Title	47296003 - Clover V1.1		Toradex Solutions Inc. 6415 Northwest Drive Mississauga, ON, L4V 1X1 Canada
Size: Letter	Number: 47296003	Revision:	
Date: 10/6/2026	Time: 3:03:00 PM	Sheet of	
File: 460_CSI_BergStak.SchDoc			